USB to High Speed Serial Port Chip CH9102

Datasheet

Version: 1C

http://wch.cn

1. Introduction

CH9102 is a USB bus converter chip, which converts USB to serial port. Provides standard MODEM signal, to expand serial port for computer or upgrade directly from normal serial device or MCU to USB bus.

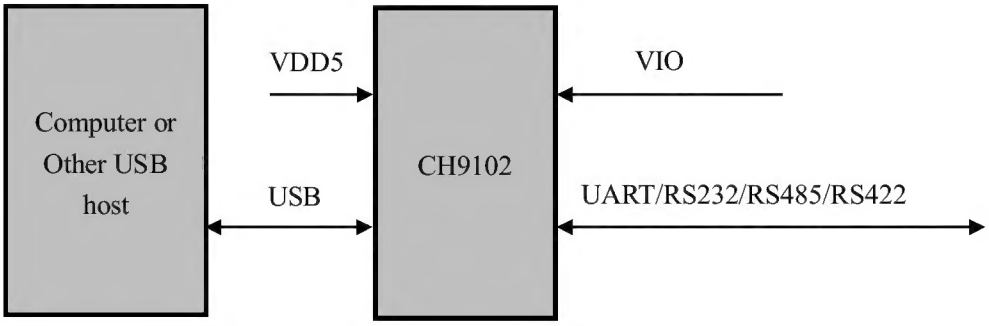

2. Features

- Full speed USB device interface, USB 2.0 compatible.
- Built-in firmware, emulate standard UART interface, used to upgrade the original serial peripherals or expand additional UART via USB.
- Original serial applications are totally compatible without any modification in Windows operating systems.
- Supports free installation OS which built-in CDC driver or multi-functional high-speed VCP vendor driver.
- Hardware full duplex UART interface, integrated independent transmit-receive buffer, supports communication baud rate varies from 50bps to 4Mbps.
- UART supports 5, 6, 7 or 8 data bits, and supports odd, even, space, mark and none parity.
- Supports common MODEM interface signals RTS, DTR, DCD, RI, DSR and CTS.
- Supports CTS and RTS hardware automatic flow control.
- Supports half-duplex, provides sending status TNOW, used for controlling RS485 to transmit-receive switch.
- Supports RS232 interface, through external voltage conversion chip.
- Supports 5V and 3.3V power supply.
- CH9102F UART interface I/O powered independently, support 5V, 3.3V, 2.5V, 1.8V power supply voltages.
- CH9102X UART interface I/O only supports 3.3V power supply voltage.
- Integrated power-on reset, integrated clock, no external crystal required.
- Built-in EEPROM used to configure the chip of VID, PID, maximum current value, vendor and product information string, etc.
- Integrated Unique ID (USB Serial Number).

- RoHS compliant QFN24 and QFN28 lead-free package.

3. Packages

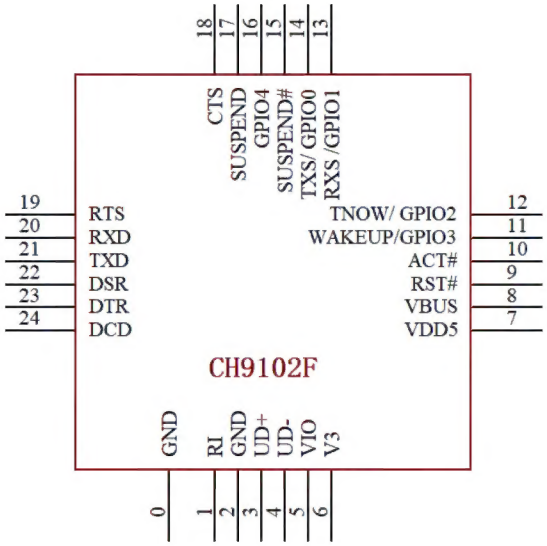

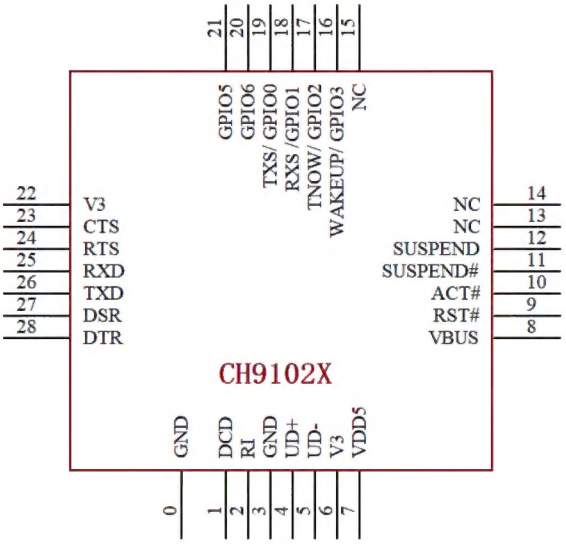

Package	Body size	Lead pitch		Description	Part No.
QF24_4X4	4*4mm	0.5mm	19.7mil	Square leadless 24-pin patch	CH9102F
QF28_5X5	5*5mm	0.5mm	19.7mil	Square leadless 28-pin patch	CH9102X

Note:

The backplane of CH9102F/CH9102X is 0# pin GND, which is an optional but recommended connection; other GND are necessary connections.

CH9102X VIO pins and V3 pins have been short-circuited internally.

The USB transceiver of CH9102 is designed according to the built-in design of USB2.0, and it is recommended that no external resistor is in series with UD+ and UD- pins.

4. Pin definitions

QNF24 Pin No.	QNF28 Pin No.	Pin Name	Pin Type	Pin Description
7	7	VDD5	POWER	Power supply voltage input, requires an external decoupling capacitor
5	V3 connected to VIO internally	VIO	POWER	I/O power supply voltage input, requires an external decoupling capacitor
2,0	3, 0	GND	POWER	Ground, connected to ground of USB bus directly
6	6, 22	V3	POWER	Internal voltage regulator output and kernel and USB power supply input. When VDD5 voltage is less than 3.6V, connects to VDD5. When VDD5 voltage is more than 3.6V, connects to external 0.1uF decoupling capacitor

9	9	RST	IN	Input of external reset, active low, built-in pull-up resistor
3	4	UD+	USB signal	Connect to USB D+ Signal directly, do not series resistors
4	5	UD-	USB signal	Connect to USB D- Signal directly, do not series resistors
8	8	VBUS	IN	VBUS status detection input of USB bus, built-in pull-down resistor
21	26	TXD	OUT	Transmit asynchronous data output, idle state is high level
20	25	RXD	IN	Receive asynchronous data input, integrated pull-up resistor
18	23	CTS	IN	MODEM input signal, clear to send, active low
22	27	DSR	IN	MODEM input signal, data set ready, active low
1	2	RI	IN	MODEM input signal, ring indicator , active low
24	1	DCD	IN	MODEM input signal, data carrier detect, active low
23	28	DTR	OUT	MODEM output signal, data terminal ready, active low
19	24	RTS	OUT	MODEM output signal, request to send, active low
15	11	SUSPEND#	OUT	USB suspend state output, active low, normal working state output high level, output low level after suspension
17	12	SUSPEND	OUT	USB suspend state output, active high, normal working state output low level, output high level after suspension
11	16	WAKEUP/ GPIO3	IN/ (IN/OUT)	USB wake-up event detects input, low active, built-in pull-up resistor General GPIO3, input or output controlled by driver software t
12	17	TNOW/ GPIO2	OUT/ (IN/OUT)	The serial port sends the status indication in progress, active high General GPIO2, input or output controlled by driver software
13	18	RXS/GPIO1	OUT/ (IN/OUT)	RXD pin receive status output; General GPIO1, input or output controlled by driver software
14	19	TXS/GPIO0	OUT/ (IN/OUT)	TXD pin transmit status output; General GPIO0, input or output controlled by driver software
NONE	20	GPIO6	IN/OUT	General GPIO6, input or output controlled by driver software
NONE	21	GPIO5	IN/OUT	General GPIO5, input or output controlled by driver software
16	NONE	GPIO4	IN/OUT	General GPIO4, input or output controlled by driver software
10	10	ACT#	OUTPUT	USB configuration completed state output, active low, invalid when suspended

NONE	13, 14, 15	NC	NONE	No Connection, must be suspended

5. Function descriptions

5.1. Internal structure

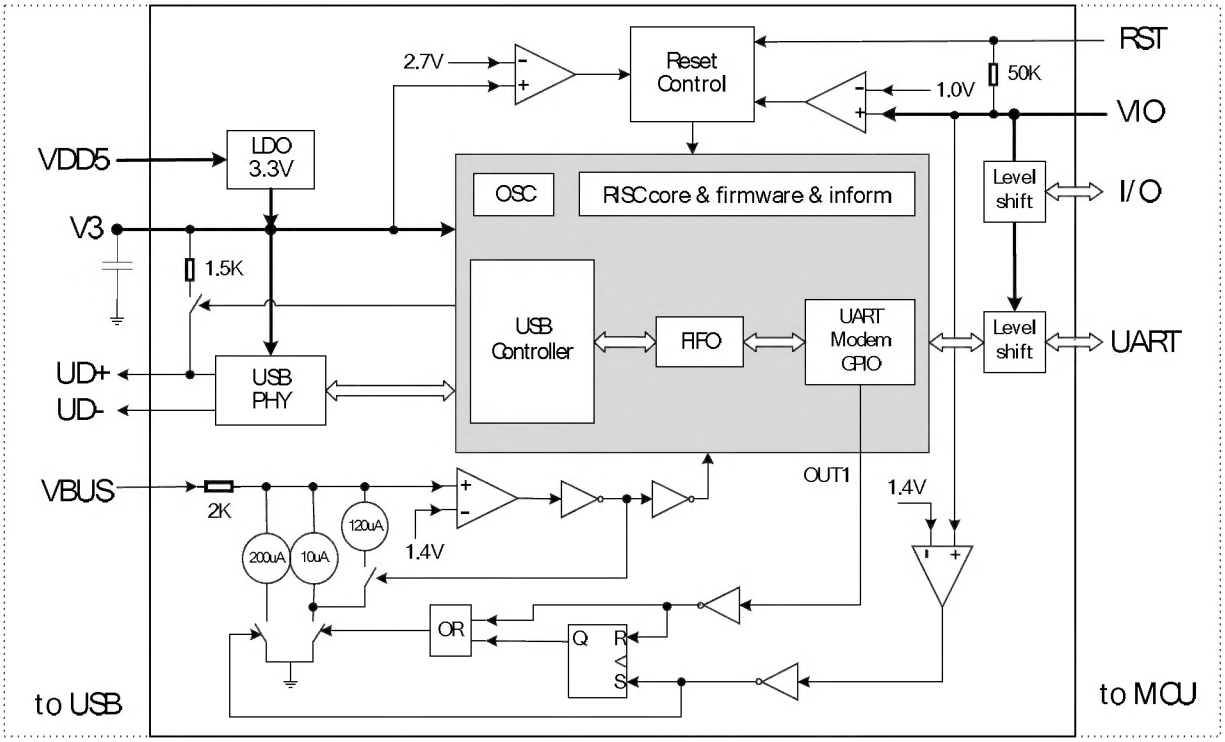

5.2. Power and power consumption

CH9102 has 3 power supplies and a built-in voltage regulator which generates 3.3V. VDD5 is the input of the power regulator, V3 is the output of the voltage regulator and USB transceiver and core power supply input, and VIO is the I/O pin power supply.

CH9102 supports 5V or 3.3V supply voltage, and the V3 pin should be externally connected to a power decoupling capacitor with a capacity of about 0.1uF. When using 5V power supply (greater than 3.8V), VDD5 inputs external 5V power supply (for example, the USB bus power supply), the internal voltage regulator generates 3.3V on V3 which used by USB transceivers. When using 3.3V or lower operating voltage (less than 3.6V), V3 should be connected to VDD5, while input external 3.3V power supply. V3 still requires an external decoupling capacitor.

VIO pin of CH9102 provides I/O power for serial port I/O and RST pin. It supports 1.8V～5V power supply voltage. VIO should use the same power supply as MCU and other peripherals. UD+, UD- and VBUS pins use V3 power supply, not VIO power supply.

CH9102 automatically supports USB device suspension to save power consumption. In the USB suspend state, if the I/O output pin has no external load and the I/O input pin is floating (internally pulled up) or in a high level state, the VIO power supply will not consume current. In addition, when V3 and VDD5 lose power and are at a voltage of 0V, the current consumption of VIO is the same as above, and VIO will not flow backwards current to VDD5 or V3.

VBUS should be connected to USB bus power supply, and when the loss of USB power is detected, CH9102 will turn off the USB and sleep (hang up). CH9102 provides VIO low-voltage protection mechanism when VBUS connects with resistor in series and used to control VIO power through PMOS. During the shutdown of the VBUS pull down resistance, if VIO voltage is detected to be lower than about 1.4V, then CH9102 will automatically absorb about 300uA discharge current on VBUS, until the end of the discharge current after the VIO voltage rises, and enables the pull-down resistance automatically.

Several power supply connection schemes for reference here:

<table>
<tr><td rowspan="2">Power supply scheme</td><td rowspan="2">UART signals voltage
MCU operating voltage</td><td>VDD5</td><td>V3</td><td>VIO</td><td>MCU or peripheral power supply</td></tr>
<tr><td>Not less than V3 voltage</td><td>Rated around 3.3V</td><td colspan="2">Both use the same power supply, 1.8V～5V</td></tr>
<tr><td rowspan="4">All USB power supply</td><td>5V</td><td>USB powered 5V</td><td>Connects to capacitor only</td><td colspan="2">USB powered 5V</td></tr>
<tr><td>3.3V</td><td>USB powered 5V</td><td>Connects to capacitor</td><td colspan="2">Powered by V3 for 3.3V, up to 10mA</td></tr>
<tr><td>3.3V</td><td colspan="4">USB 5V power stepped down to 3.3V via external LDO power regulator, V3 connects to external capacitor</td></tr>
<tr><td>1.8V～4V</td><td>USB powered 5V</td><td>Connects to capacitor only</td><td colspan="2">USB powered by external LDO regulator</td></tr>
<tr><td>USB+ self-powered Dual power supply</td><td>1.8V～5V</td><td>USB powered 5V</td><td>Connects to capacitor only</td><td colspan="2">Self-powered 1.8V～5V (1.8V, 2.5V, 3.3V, 5V)</td></tr>
<tr><td rowspan="2">All self-powered</td><td>4V～5V</td><td>Self-powered 4V～5V</td><td>Connects to capacitor only</td><td colspan="2">Self-powered 4V～5V</td></tr>
<tr><td>1.8V～5V</td><td colspan="2">Self-powered, rated 3.3V, connects to external capacitor</td><td colspan="2">Self-powered 1.8V～5V</td></tr>
</table>

Recommended dual power supplies scheme, only VIO and MCU use the same power supply, low-current consumption VIO current is only 2uA when USB suspend or sleep.

VIO and V3 of CH9102X have been shorted internally. VIO uses the 3.3V power output by the internal voltage regulator LDO. CH9102X only supports 3.3V serial port signals.

5.3. UART description

In UART mode, CH9102 contains: data transfer pins, MODEM interface signals and assistant pins.

Data transfer pins contain: TXD and RXD. RXD should be high when UART input is idle. When UART output is idle, TXD is high level.

MODEM interface signals contain: CTS, DSR, RI, DCD, DTR and RTS. All these MODEM interface

signals are controlled and function defined by computer applications.

Assistant pins contain: TNOW, SUSPEND#, SUSPEND, WAKEUP, RXS, TXS, ACT#, etc.

TNOW is the status indication pin that the serial port is transmitting data, which can be used to control the RS485 transceiver switching. When TNOW outputs low or high level, UART sending and receiving can be performed at the same time.

SUSPEND# and SUSPEND are the output signals to indicate suspend states of the chip. When the chip is in the normal working state, the SUSPEND# pin outputs a high level, and the SUSPEND pin outputs a low level; when the chip is in a suspend state, the SUSPEND# pin outputs low level, SUSPEND pin outputs high level.

WAKEUP is the USB wake-up event detection input pin. It is low active and has a built-in pull-up resistor.

RXS is the output pin of UART receiving data status, TXS is the output pin of UART sending data status.

ACT# is USB device configuration complete status output, which can be used to notify the MCU or drive the LED which connects to the VIO through the current limiting resistor.

CH9102 supports CTS and RTS hardware automatic flow control, which can be enabled by software. If enabled, UART will continue to send the next data only when CTS is valid (active low), otherwise the UART transmission will be suspended; when the receiving buffer is empty, UART will automatically set RTS to be valid (active low), it will automatically invalidate RTS until the data in the receiving buffer is nearly full, and RTS will be valid again when the buffer is empty. While using hardware automatic flow control, CTS of CH9102 should connect to RTS of the other side, and RTS of CH9102 should connect to CTS of the other side.

CH9102 has integrated separate transmit-receive buffer and supports simplex, half-duplex and full duplex UART communication. UART data contains one low-level start bit, 5, 6, 7 or 8 data bits and 1 or 2 high-level stop bits, supports odd/even/mark/space parity. CH9102 supports common baud rate: 50, 75, 100, 110, 134.5, 150, 300, 600, 900, 1200, 1800, 2400, 3600, 4800, 9600, 14400, 19200, 28800, 33600, 38400, 56000, 57600, 76800, 115200, 128000, 153600, 230400, 256000, 307200, 460800, 921600, 1M, 1.5M, 2M, 3M 4M etc.

In applications with high communication baud rate, it is recommended to enable hardware automatic flow control. Full-speed USB is only 12Mbps, considering the protocol overhead and other factors, the serial port should be avoided in a continuous or full-duplex high-speed communication state of 3Mbps and above in applications.

The allowable baud rate error of CH9102 UART reception is not more than 2%, the baud rate error of UART transmission is less than 1.5%.

On operating systems, CH9102 supports CDC class driver that comes with system, and VCP manufacturer driver could be installed to support high speed communication and other functions. It can simulate the standard serial port, so most serial port applications are fully compatible, usually without any modification.

CH9102 can be used to upgrade the UART peripherals, or expand extra serial ports for computers via USB bus, provides further RS232, RS485, RS422 interface, etc. through external voltage conversion chip.

5.4. Clock and reset and others

CH9102 has a built-in USB pull-up resistor, and the UD+ and UD- pins should be directly connected to the

USB bus.

CH9102 has a built-in power-on reset circuit, and also provides an external reset input pin with active low level. When the RST pin is at a low level, CH9102 will be reset; when the RST pin returns to a high level, CH9102 internal will continue to delay reset for about 15mS, and then enter the normal working state

CH9102 has a built-in low-voltage reset circuit, and monitors the voltage of the V3 pin and VIO pin at the same time. When the voltage of V3 is lower than VRV3 or the voltage of VIO is lower than VRVIO, the chip will automatically reset by hardware.

CH9102 has built-in clock generator, without external crystal and oscillation capacitor.

5.5. Parameter configuration

In larger batch applications, the vendor identification code (VID) and product identification code (PID) of CH9102 and product information can be customized.

In less batch applications, parameters can be configured by built-in EEPROM. CH9102F chip with built-in EEPROM can be used (EEPROM is built-in when the 4th digit from the bottom of batch number is a letter). After installs VCP vendor driver, through configuration tool CH34xSerCfg.exe provided by chip manufacturer, it can be flexibly configured the identification code (VID), product identification code (PID), maximum current value, BCD version number, manufacturer information and product information string and other descriptor, etc.

6. Parameters

6.1. Absolute maximum ratings

(Operating in critical ratings or exceeding the absolute maximum ratings may cause chip to not work or even be damaged)

Name	Parameter Description	Min.	Max.	Unit
TA	Operating Ambient Temperature	-40	85	℃
TS	Storage Temperature	-55	125	℃
VDD5	USB power supply voltage (VDD5 connects to power, GND connects to ground)	-0.5	6.0	V
VIO	Serial port I/O power supply voltage (VIO connects to power, GND connects to ground)	-0.5	6.0	V
VVBUS	Voltage on VBUS	-0.5	6.5	V
VUSB	Voltage on USB signals	-0.5	V3+0.5	V
VUART	Voltage on UART and other pins	-0.5	VIO+0.5	V

6.2. Electrical parameters

(Test conditions: TA=25℃,VCC=5V OR VDD5=V3=3.3V, VIO=1.8～5V, exclude USB pin)

Name	Parameter Description		Min.	Typical	Max.	Unit
VDD5	USB power supply voltage	V3 doesn't connect to VDD5, V3 connected to capacitor	4.0	5	5.5	V
		V3 connected to VDD5, VDD5=V3	3.0	3.3	3.6	
VIO	Serial port I/O power supply voltage		1.7	5	5.5	V
IVDD	Operating VDD5 or V3 power supply current			3	15	mA
IVIO	Operating VIO Supply current			0	10	mA
ISLP	The supply current when USB is suspended	VDD5 power supply =5V		0.09	0.16	mA
		VDD5=V3 power supply =3.3V		0.085	0.15	mA
		VIO power supply, no I/O load/pull up		0.002	0.05	mA
ILDO	External load capacity of internal power regulator				10	mA
VIL	Input high voltage	VIO=5V	0		1.5	V
		VIO=3.3V	0		0.9	V
		VIO=1.8V	0		0.5	V
VIH	Input high voltage	VIO=5V	2.5		VIO	V
		VIO=3.3V	1.9		VIO	V
		VIO=1.8V	1.3		VIO	V
VIHVBS	VBUS pin high level voltage	VIO=1.8～5V	1.7		5.8	V
VOL	Output Low Voltage	VIO=5V, 15mA draw current		0.4	0.5	V
		VIO=3.3V, 8mA draw current		0.3	0.4	V
		VIO=1.8V, 3mA draw current		0.3	0.4	V
VOH	Output High Voltage	VIO=5V, 10mA output current	VIO-0.5	VIO-0.4		V
		VIO=3.3V, 5mA output current	VIO-0.4	VIO-0.3		V
		VIO=1.8V, 2mA output current	VIO-0.4	VIO-0.3		V
IPUP	Pull-up current of serial port and RST pin (pull up to VIO voltage)	VIO=5V	35	150	220	uA
		VIO=3.3V	15	60	90	uA
		VIO=1.8V	3	14	21	uA
IPDN	Pull-down current on VBUS	VBUS>1.6V	6	10	16	uA
		VBUS<1.3V	50	140	200	uA
VRV3	V3 Power-on reset/low voltage reset voltage threshold		2.5	2.7	2.9	V
VRVIO	VIO power supply low voltage reset voltage threshold		0.8	1.0	1.15	V

VESD	HBM ESD withstand voltage on USB or I/O pins	5	6		KV

6.3. Timing parameters

(Test conditions: TA=25℃,VDD5=5V or VDD5=V3=3.3V, VIO=1.8V～5V)

Name	Parameter Description		Min.	Typ.	Max.	Unit
FD	Error of internal clock (influence baud rate comparatively)	TA=-15℃～60℃	-1.0	±0.5	+1.0	%
		TA=-40℃～85℃	-1.5	±0.8	+1.5	%
TRSTD	Reset delay after power on or external reset input		9	15	25	mS
TRI	Effective signal width of RST external reset input		100			nS
TSUSP	Detect USB automatic suspend time		3	5	9	mS
TWAKE	Wake-up completion time after chip sleep		1.2	1.5	5	uS

7. Applications

7.1. USB to 9-line TTL UART

The figure below is the USB to TTL converter realized by CH9102F. Only RXD, TXD and public ground are necessary connection, while the others are optional.

P4 is USB port, USB bus contains a pair of 5V power lines and a pair of data signals. Usually, the color of +5V power line is red, the black one is ground. D+ signal line is green and the D- signal line is white. The max supply current of USB bus is up to 500mA.The VBUS pin detects the USB power supply status here.

The capacitor C2 on V3 is 0.1uF, used to CH9102 internal power decoupling. C1 and C3 are used for external power decoupling.

For CH9102F, if VIO has been short-circuited with V3 in the application, C3 can be omitted; In the case of VIO=V3=VDD5, all self-powered 3.3V, capacitors C2 and C3 can be omitted.

Three power supply schemes: One is all USB power supply, CH9102 and USB products directly use the 5V power supply provided by the USB bus, that is, VDD5=VBUS=USB 5V power, VIO=VMCU=USB 5V or 1.8V~4V after step-down; The second is separate and independent power supply. The VIO of CH9102 and the MCU of the product use self-supplied standing power VDD, while CH9102 uses USB power, and its VDD5 is connected to the USB power VBUS, that is, VDD5=VBUS=USB 5V power, VIO=VMCU=VDD= self-supply 1.8V~5V; The third is all self-powered, only detecting but not using USB power, USB products provide power VDD through self-powered mode, mainly VDD5=VIO=VMCU=VDD=self-supplied 5V or VDD5=V3=VIO=VMCU=VDD=self-supplied 3.3 V two kinds.

When designing the PCB, pay attention to: the decoupling capacitors C1, C2 and C3 should be as close as possible to the connected pins of CH9102; The D+ and D- signal lines are placed close to the parallel wiring, and ground or copper should be provided on both sides to reduce signal interference from the other parts.

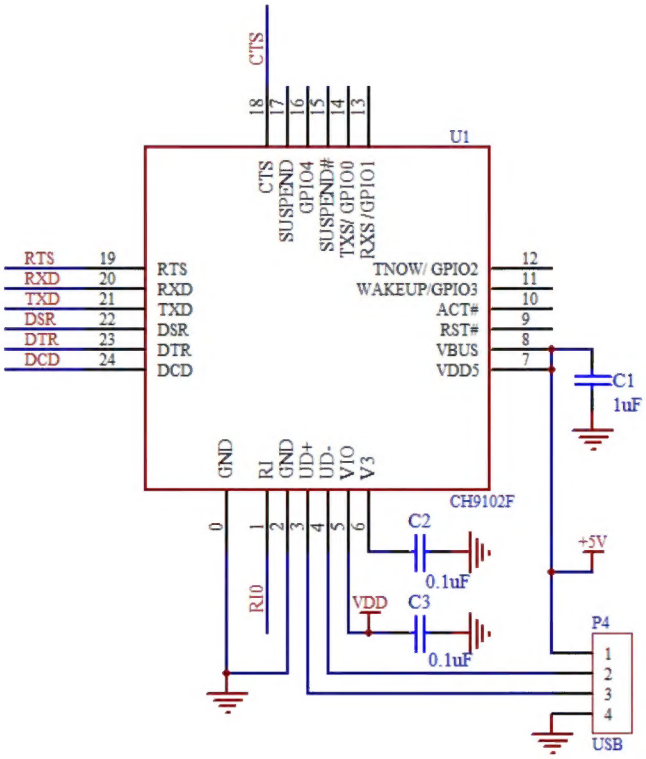

7.2. USB to 9-line RS232 UART

CH9102 provides common UART and MODEM signals, converts TTL to RS232 through level conversion chip U2. Port P2 is DB9 connector, the pins and their functions are the same as common PC DB9 connector, the chips similar with U2 have MAX213/ADM213/SP213/MAX211 etc.U2 in the image is uniformly powered by the USB bus through R4.

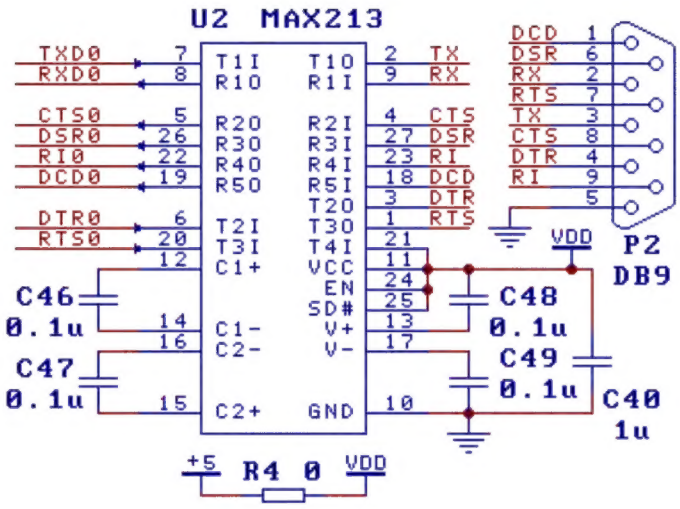

7.3. USB to RS485 UART

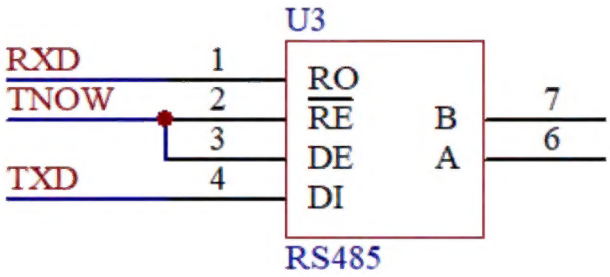

In the figure, TNOW is the switch pin, the TNOW pin can be used to control DE (active high and transmit enabled) and RE# (active low and receive enabled) pin of RS485 transceiver. RS485 transceiver should use the same power supply as VIO.